Digital Supply to MCU & Peripherals

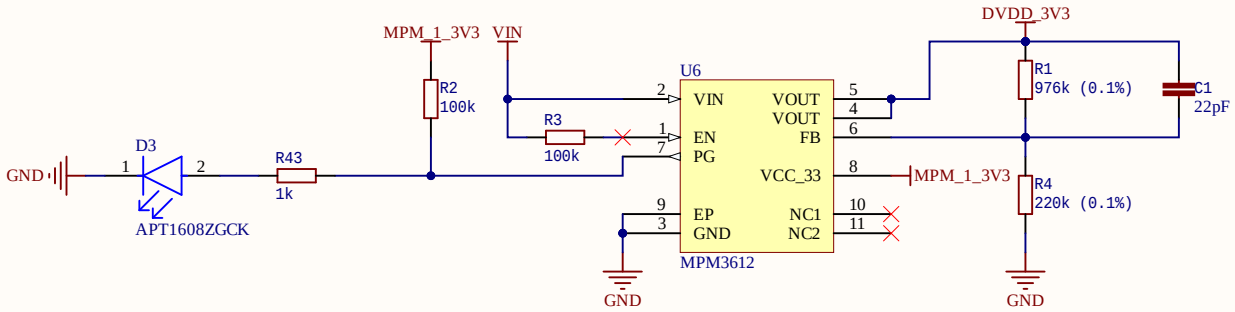

Power Bypass Network

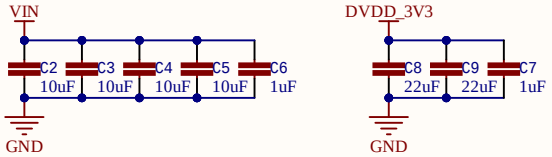

- EN is pulled high for always ON supply to the ESP32 module for continue uC monitoring and control.

- Output set to 3.3V

Title		
Size A	Number	Revision
Date: 3/09/2026		Sheet of
File: Digital_Supply_MCU.SchDoc		Drawn By:

Digital Supply to Laser Controller

Vin = 9~20V; Vout = 8V @ 3A

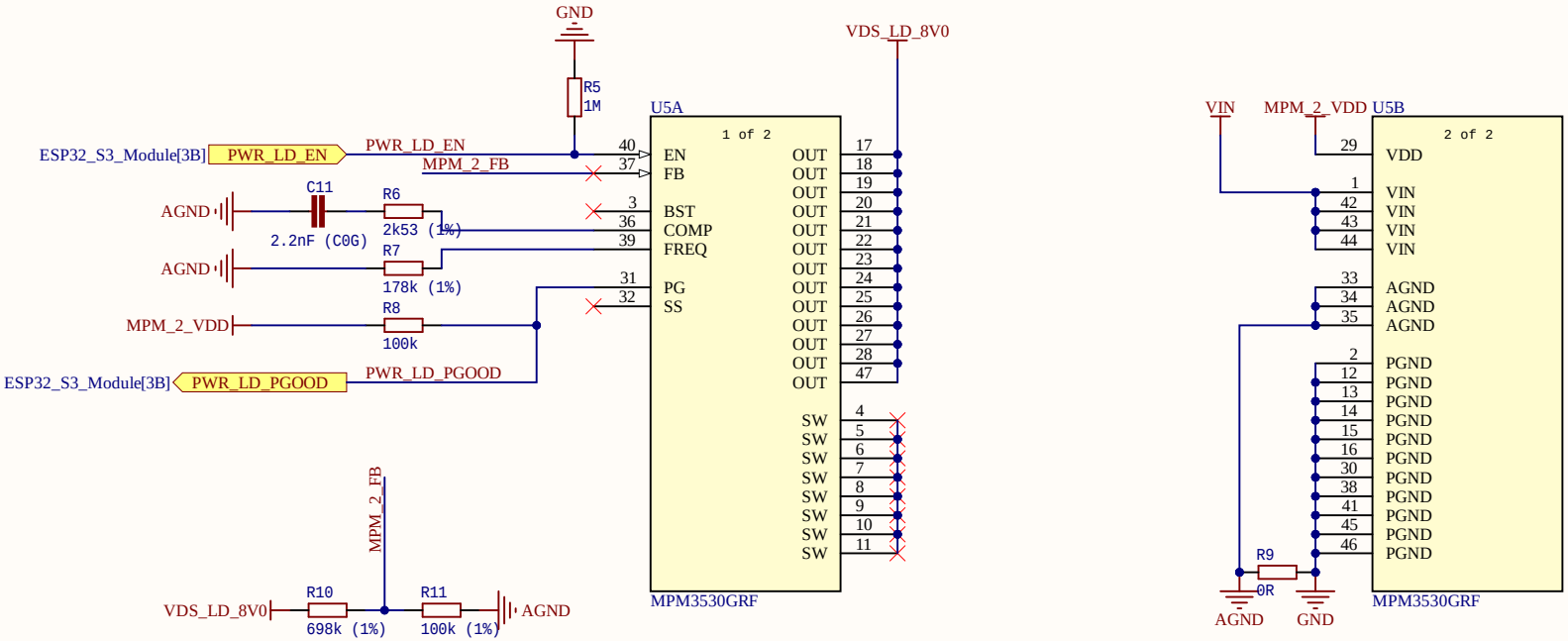

- EN is pulled low for always OFF supply; ESP32 can turn it ON once conditions are met.

- Output set to 8V

- f_SW set to 300kHz (R_SW=178k), if unstable at low input voltage (~9V), increase R_SW to lower the SW freq. AVOID 500kHz to prevent beating issue with LD Driver.

Power Bypass Network

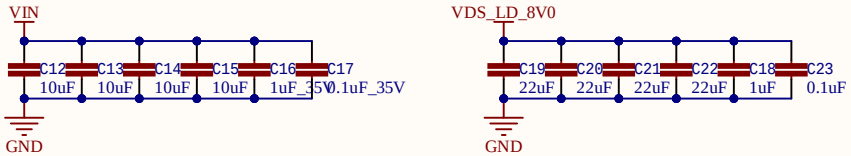

Title		
Size A	Number	Revision
Date: 3/09/2026		Sheet of
File: Digital_Supply_LD-Driver.SchDoc		Drawn By:

Digital Supply to TEC Controller

Vin = 9~20V; Vout = 5.0V @ 3A

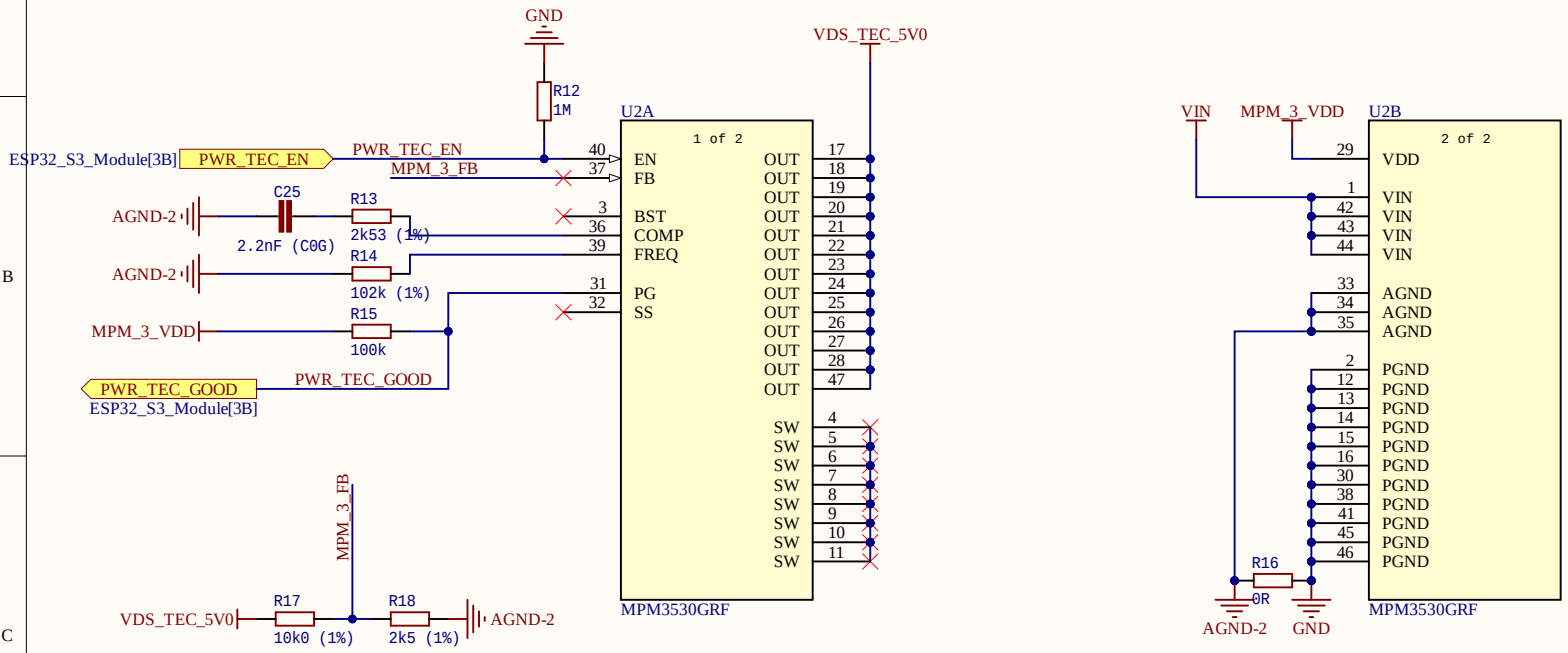

- EN is pulled low for always OFF supply; ESP32 can turn it ON once conditions are met.

- Output set to 5V

- f_SW set to 500kHz (R_SW=102k), if unstable at low input voltage (~9V), increase R_SW to lower the SW freq.

Power Bypass Network

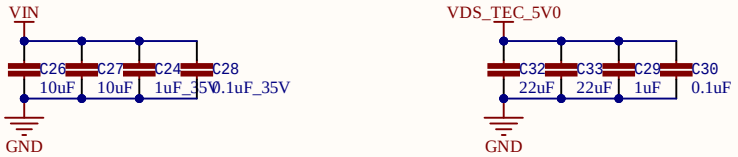

Title		
Size A	Number	Revision
Date: 3/09/2026		Sheet of
File: Digital_Supply_TEC-Driver.SchDoc		Drawn By:

ESP32 S3 WROOM 1U Core

N or H series without PSROM; for higher operating temp

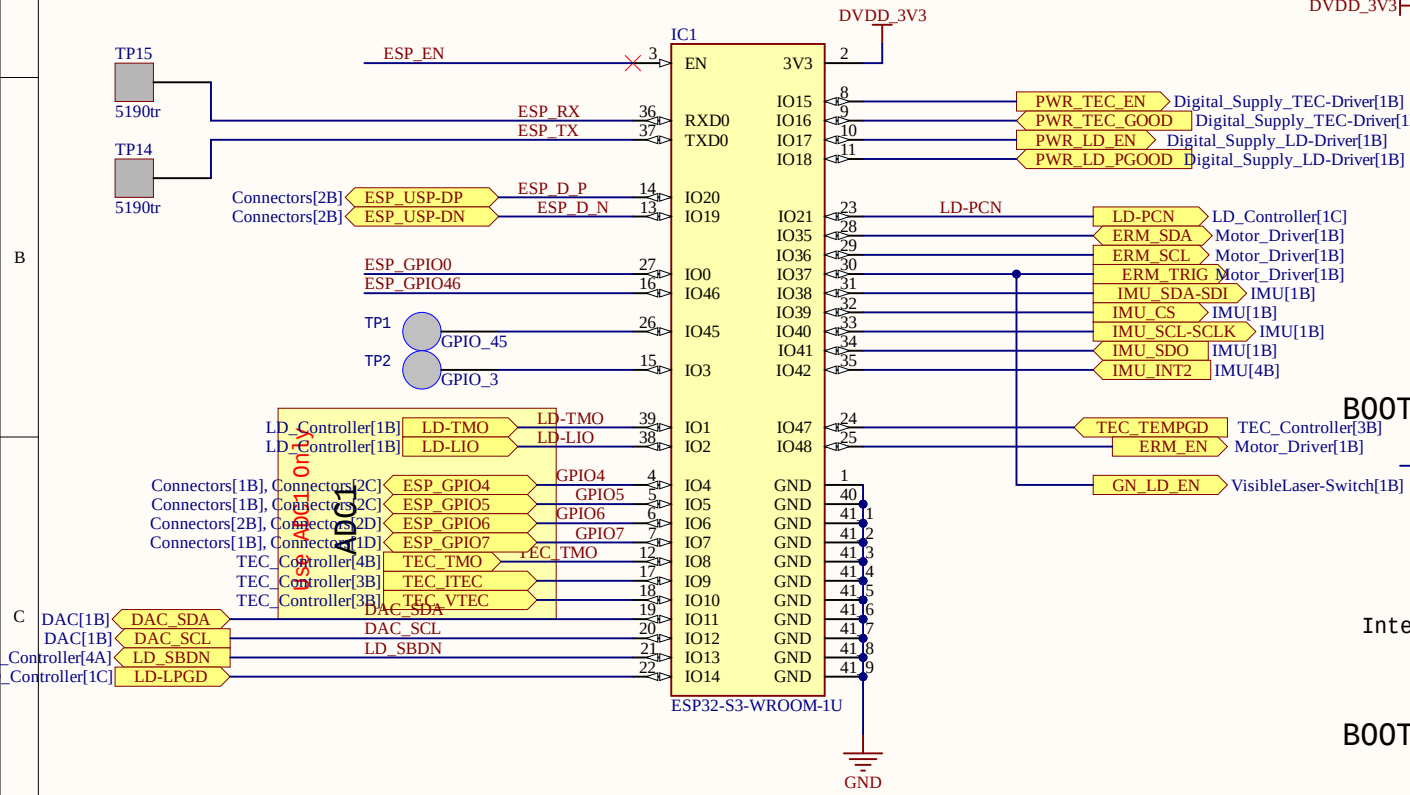

RST Button

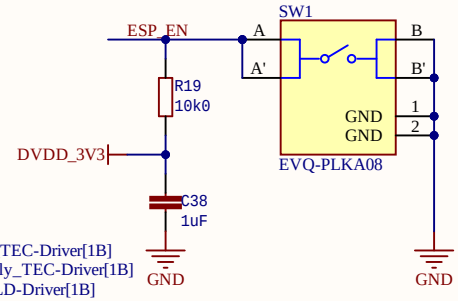

BOOT Button (GPIO0)

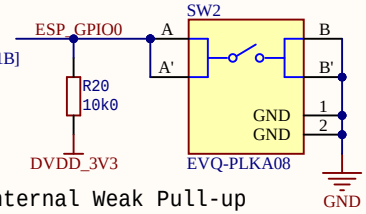

Internal Weak Pull-up

BOOT Option (GPIO46)

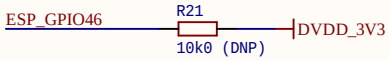

Internal Weak Pull-down

Power Bypass Network

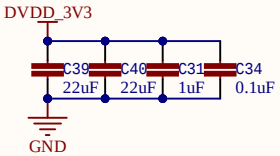

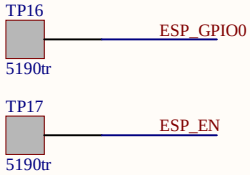


```
Boot Modes:
  SPI Boot (Normal):   GPIO0 -> LOW; GPIO46 -> Any
  Joint Download Boot: GPIO0 -> LOW; GPIO46 -> LOW

Keep IO3, IO45 OPEN for internal functions
  VDD_SPI kept at 3V3 default for internal FLASH
```

IMU Module LSM6DSOTR

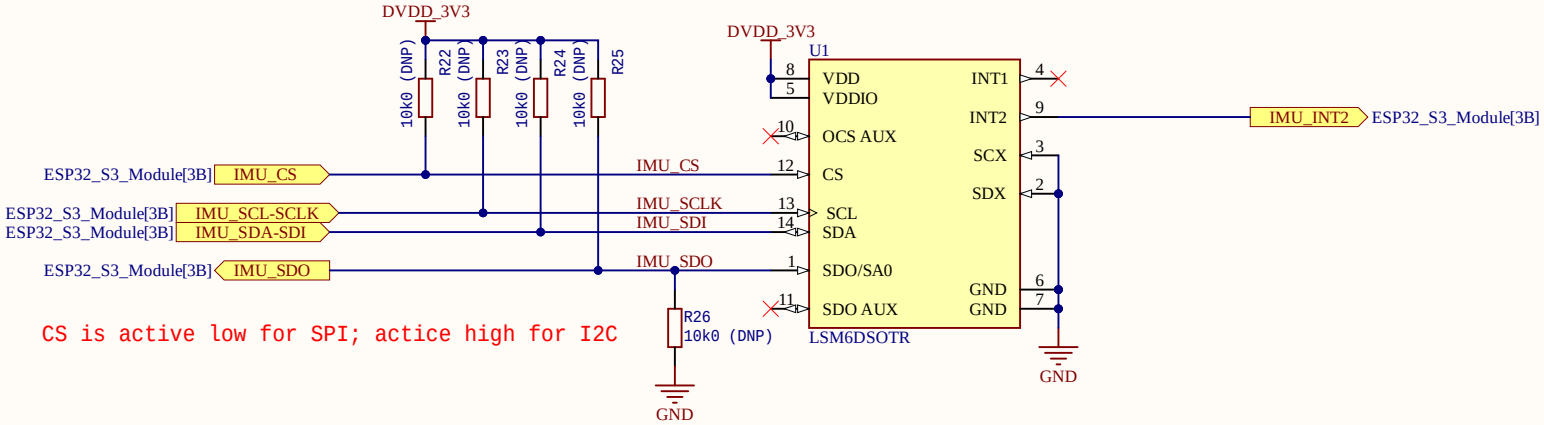

CS is active low for SPI; actice high for I2C

Power Bypass Network

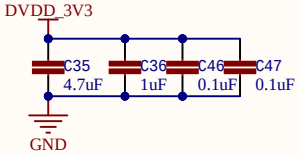


```
Connection Mode:
  Mode 1 is used for direct connection to ESP32

INT1 left floating to force I2C operation (instead of I3C) in
I2C/I3C mode

SCX & SDX pulled to GND for I2C/SPI operation

SDO/SA0 pulled low for I2C mode least significant bit to 0

Populate R22 ~ R26 for I2C operation
```

Title		
Size A	Number	Revision
Date: 3/09/2026		Sheet of
File: IMU.SchDoc		Drawn By:

Laser Diode Controller

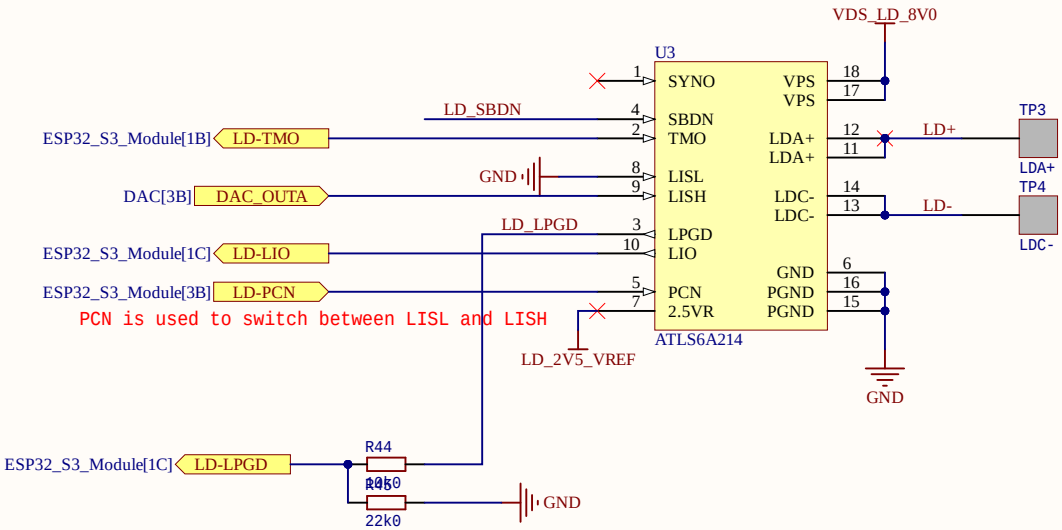

LD Standby Logic

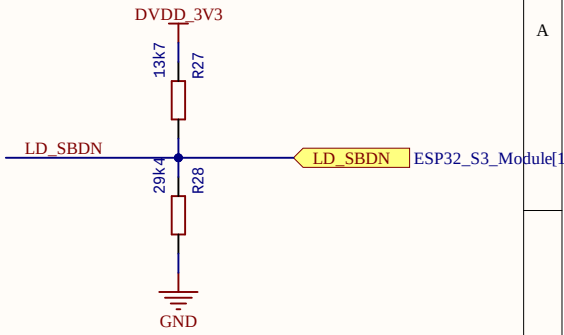

Loop Good Indicator

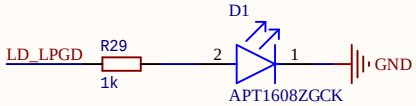

Power Bypass Network

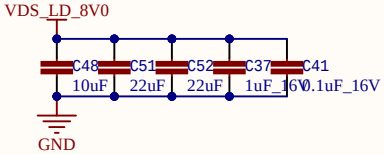

1. LISL/LISH take 0~2.5V signal map to 0~6A output linearly.

2. LD_2V5_VREF maximum output current 10mA.

3. Resistor network on SBDN set SBDN in with three levels:
   a. GPIO=LOW -> 0V
   b. GPIO=HIGH -> 3V3
   c. GPIO=HiZ -> 2V25

Title		
Size A	Number	Revision
Date: 3/09/2026		Sheet of
File: LD_Controller.SchDoc		Drawn By:

TEC Controller

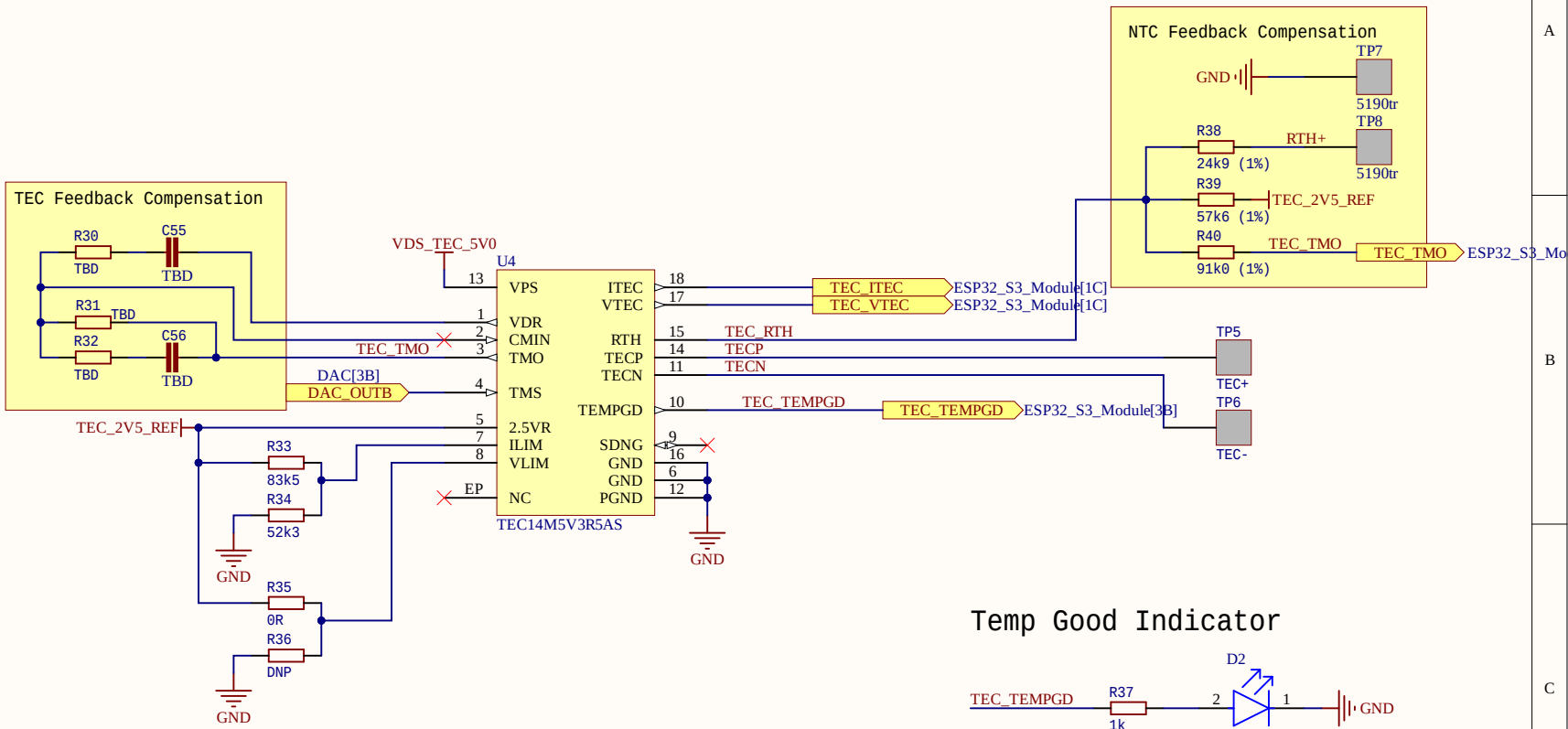

Temp Good Indicator

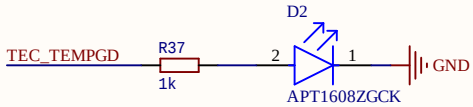

Power Bypass Network

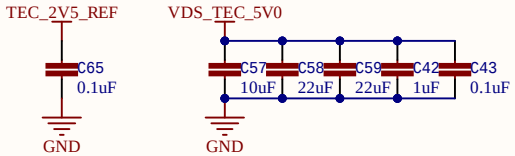

1. Set Vlim to 5V by:
   - R35 -> 0R
   - R36 -> DNP

2. Ilim set to 1A(Heat) and 3.5A(Cool) by:
   - R33 -> 83k5
   - R34 -> 52k3

3. R38~R40 are used to set temperature range to 5C/35C/65C.

Title		
Size A	Number	Revision
Date: 3/09/2026		Sheet of
File: TEC_Controller.SchDoc		Drawn By:

External Connection

Vin Power Bypass Network

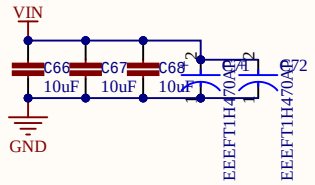

B2B - VIN Board

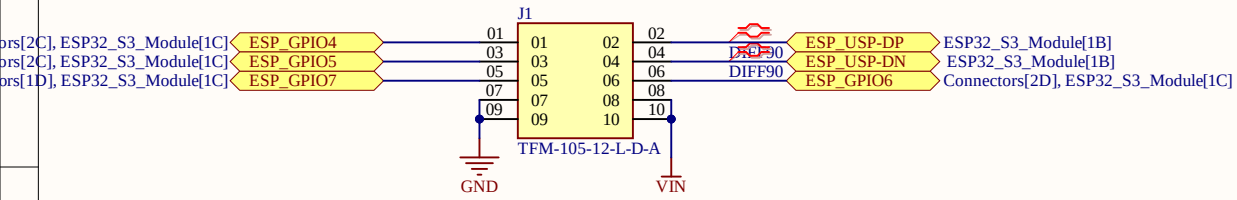

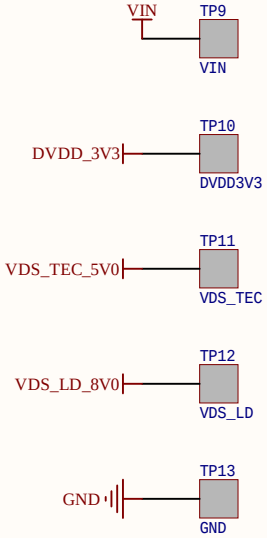

B2B - Sensor & LED Board

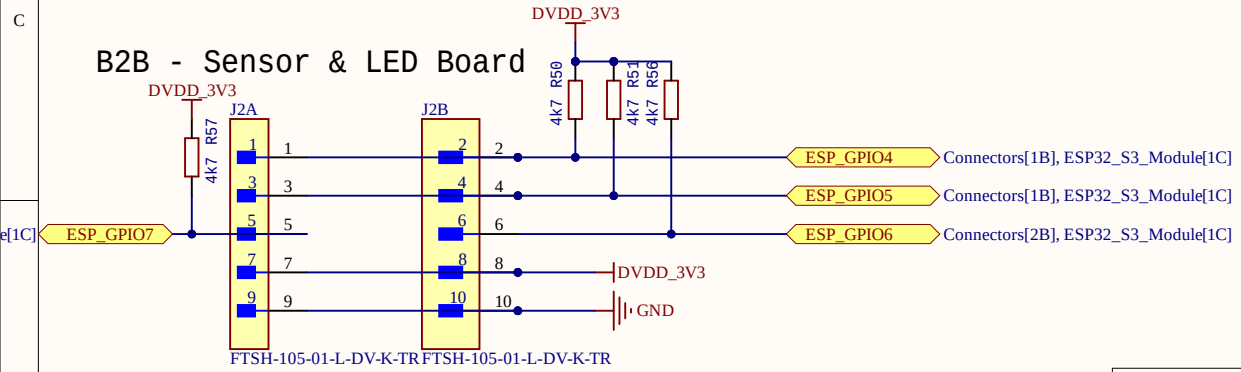

Title		
Size A	Number	Revision
Date: 3/09/2026		Sheet of
File: Connectors.SchDoc		Drawn By:

DAC for TEC/LD Settings

12/14/16-bit 2-Channel

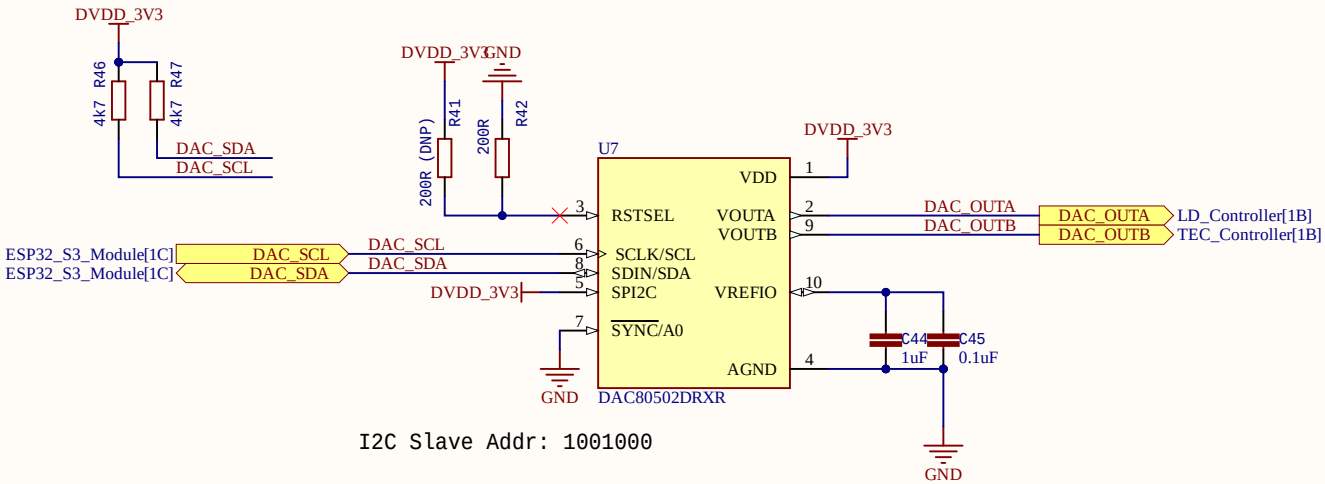

I2C Slave Addr: 1001000

Power Bypass Network

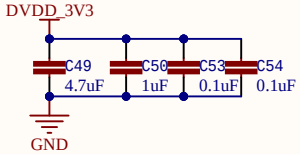

1. Power-ON behavior (Default to zeroscale):
   - Populate R41 for power up to midscale
   - Populate R42 for power up to zero scale
   - Never populate them together!

2. SPI2C pulled HIGH for I2C operation.

3. A0 pulled LOW to set slave I2C address to 1001000

4. Please set BUFF-GAIN and REF-DIV to 1. (Range: 0~2.5V)

5. Lower I2C pull-up resistance if frequency above 200kHz

Title		
Size A	Number	Revision
Date: 3/09/2026		Sheet of
File: DAC.SchDoc		Drawn By:

Haptic Motor Driver

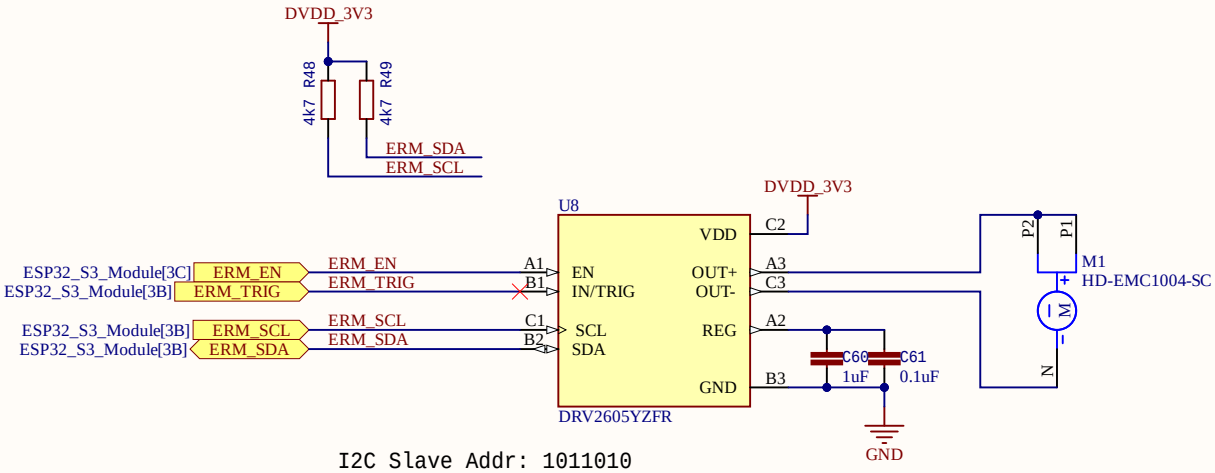

I2C Slave Addr: 1011010

Power Bypass Network

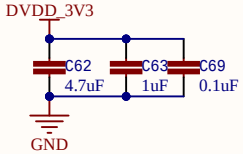

Title		
Size A	Number	Revision
Date: 3/09/2026		Sheet of
File: Motor_Driver.SchDoc		Drawn By:

Visible Laser Load Switch

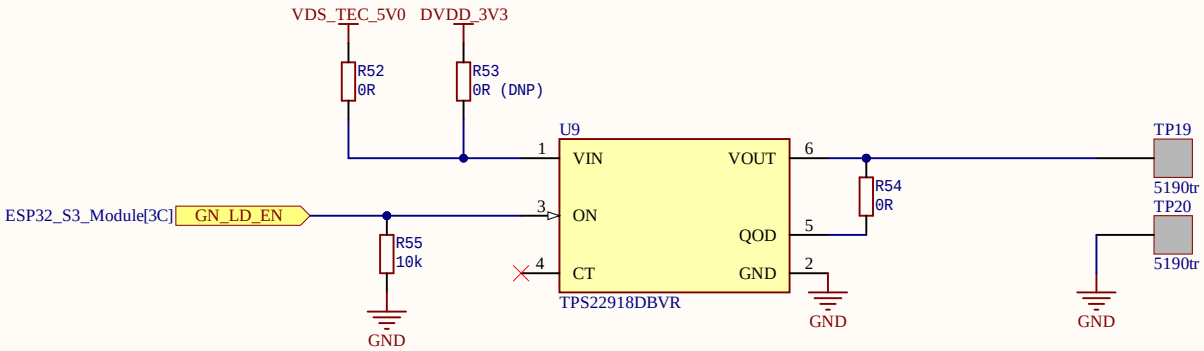

Title		
Size A	Number	Revision
Date: 3/09/2026		Sheet of
File: VisibleLaser-Switch.SchDoc		Drawn By: